PRODUCT DATASHEET

NM-SEAL

Blind cover for N male connector

Blind cover for Connector N-male

FEATURES / BENEFITS

External Document Links

Notes

Technical features

STRUCTURE

Product Line		Coaxial Cable Components
Product Type		Coaxial Adapter
Coaxial Cable Type		Foam Dielectric, Ultraflexible Foam Dielectric, Radiating Cable

MECHANICAL SPECIFICATIONS

Configuration		Cover (blind) for N male
Body		copper alloy, nickel plated
Sealing class		IP68

TEMPERATURE SPECIFICATIONS

Operation Temperature	°C (°F)	-45 to 85 (-49 to 185)

PACKAGING INFORMATION

Package Quantity		1

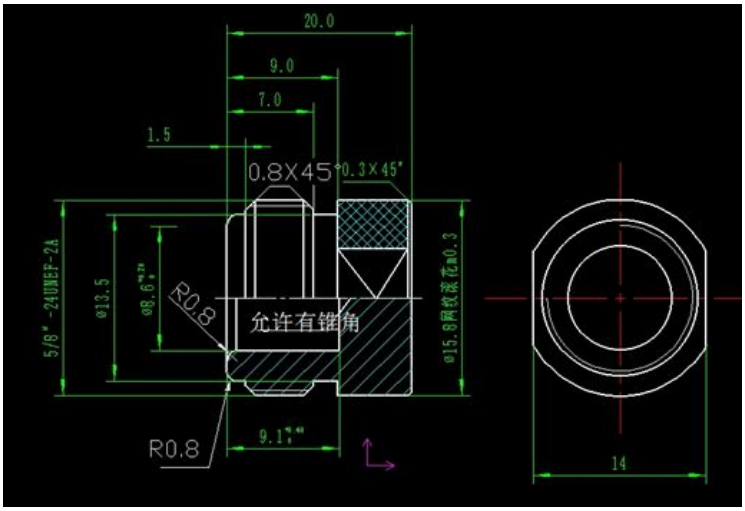

All values nominal unless tolerances provided; information contained in the present datasheet is subject to confirmation at time of ordering